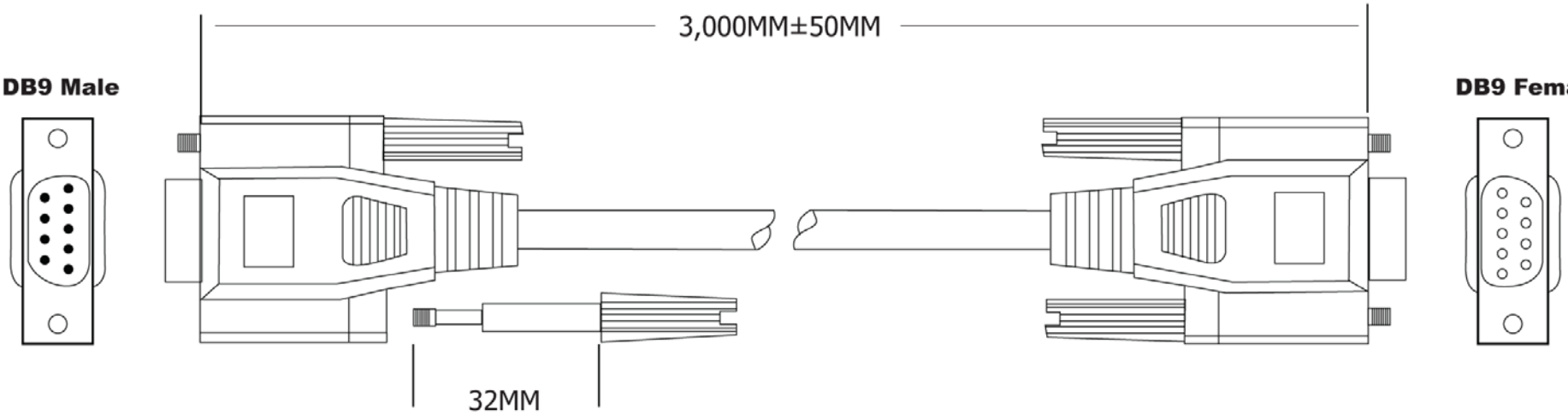

Pin Assignment

P1		P2
1	Black	1
2	Grey	2
3	Yellow	3
4	Purple	4
5	Orange	5
6	Red	6
7	Brown	7
8	Green	8
9	Blue	9
SHELL	Drain	SHELL

Material:

- Cable: #28 9C+1+AL/MY
  - OD: 5.0MM
  - Single Shielded
- Connectors: DB9M (Blue), DB9F (Blue)
- Thumbscrew: #4-40UNC Type
- Housing: Molded PVC
- Color: Beige
- Pin Assignment: 1:1

Unit: MM±0.25MM

RoHS Complaint

Scale	1:1
TOLERANCE	
X.X	±0.40
X.XX	±0.25
X.XXX	±0.15
Angle	±3°

Modification	Date	Name

		Name
Drawn	11.15.11	Chappell
Approved		

ASSMANN WSW components

Item No.

AK178-3

Title

Serial Extension Cable, 3 Meters,
D-Sub 9 Pin Male <=> D-Sub 9 Pin Female

Drawing No.

rev00

Replace

Sheet